onlinecomponents.com
THE ONLINE DISTRIBUTOR OF ELECTRONIC COMPONENTS

PACKAGE OUTLINE

TWIN TOWER

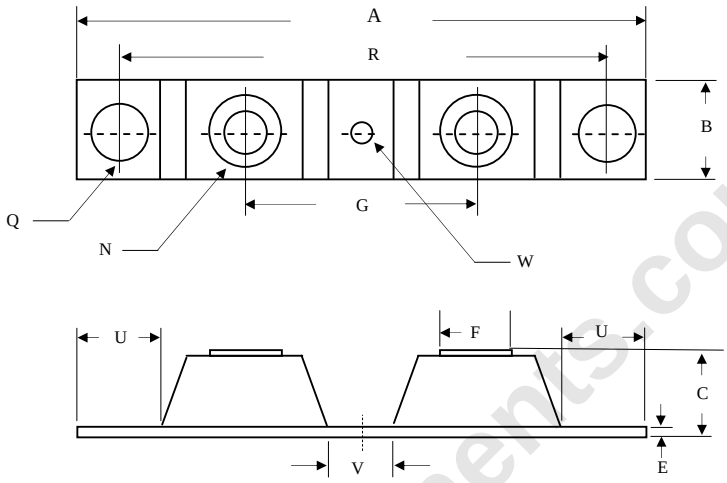

	Inches		Millimeters	
	Min	Max	Min	Max
A	-----	3.630	-----	92.40
B	0.700	0.800	17.78	20.32
C	-----	0.650	-----	16.51
E	0.130	0.141	3.30	3.60
F	0.482	0.490	12.25	12.45
G	1.379	BSC	35.02	BSC
N	1/4-20 UNC FULL			
Q	0.275	0.290	6.99	7.37
R	3.150	BSC	80.01	BSC
U	0.600	-----	15.24	-----
V	0.312	0.370	7.92	9.40
W	0.180	0.195	4.57	4.95

Dimensions in inches and (millimeters)

onlinecomponents.com